820 WEST STREET · WATERTOWN, WI 53094
KuselEquipment.com
EST. 1849 KUSEL STAINLESS PRODUCTS
PHONE: 920.261.4112
Sales@KuselEquipment.com

Kusel Security KE Drain Specification Sheet

SD6S06–044–SP

KE-S DRAIN, 316L, SQ TOP, 6" DB, 4" SCH 40
SOLID COVER, PERF BASKET

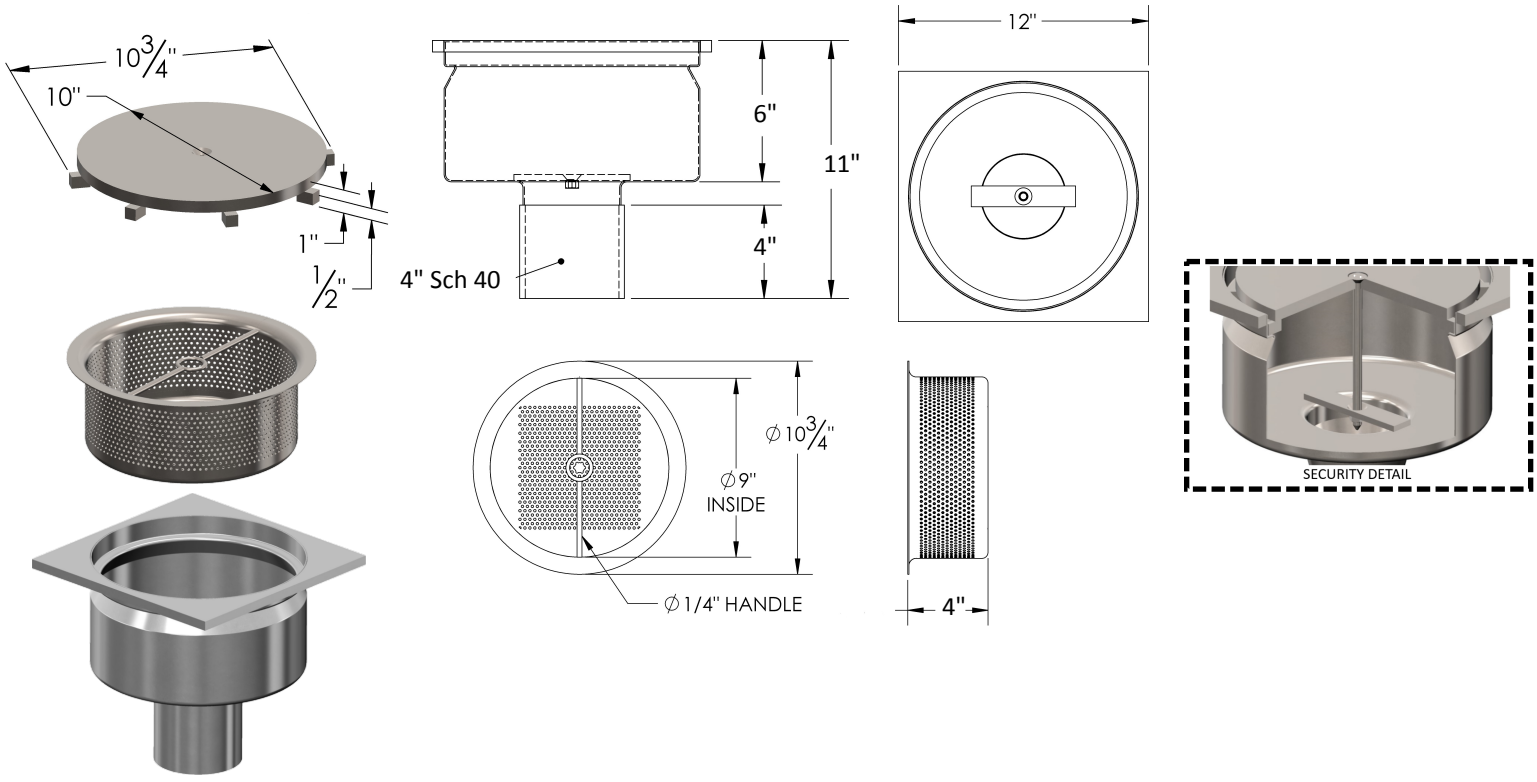

Note: Dimensions vary from illustration (Drawing not to scale) and are subject to manufacturer's tolerance. **11.13.2026**

Security KE Drain Details

MATERIAL: 316L SS
TOP: Square Top
BODY DEPTH: 6" Deep Body
OUTLET: 4" Sch 40
COVER: Solid Cover
BASKET: Perforated Basket
PRIMER: None
NON–CONCRETE: None
RING: None
SECONDARY: None
POLISH: None

Spec Text

KUSEL KE SECURITY DRAIN WITH FULL HOLD DOWN SPANNER SCREW.TYPE 316L SS. 12" SQUARE TOP PLATE WITH PASSIVATED 6" DEEP BODY AND INTEGRAL CONCRETE ANCHOR LIP. 4" SCH 40 OUTLET. STANDARD 1/2" THICK SOLID COVER WITH 1/2" PERIMETER DRAINAGE GAP. PASSIVATED PERFORATED BASKET WITH 1/8" HOLES.

Project:

Fixture Tag:

Approval

Company _____

Signed _____

Date _____

Subject to change without notice. We can assume no responsibility for use of superseded or void data. This product specification sheet is specific to the part number listed. For other configurations, contact a Kusel Equipment representative.