820 WEST STREET · WATERTOWN, WI 53094
KuselEquipment.com
EST. 1849 KUSEL STAINLESS PRODUCTS
PHONE: 920.261.4112
Sales@KuselEquipment.com

Kusel P-Trap Specification Sheet

PT6-154-03Z03Z

P-TRAP, 316L, 1-1/2" SCH 40
3" RISE, 3" RUN



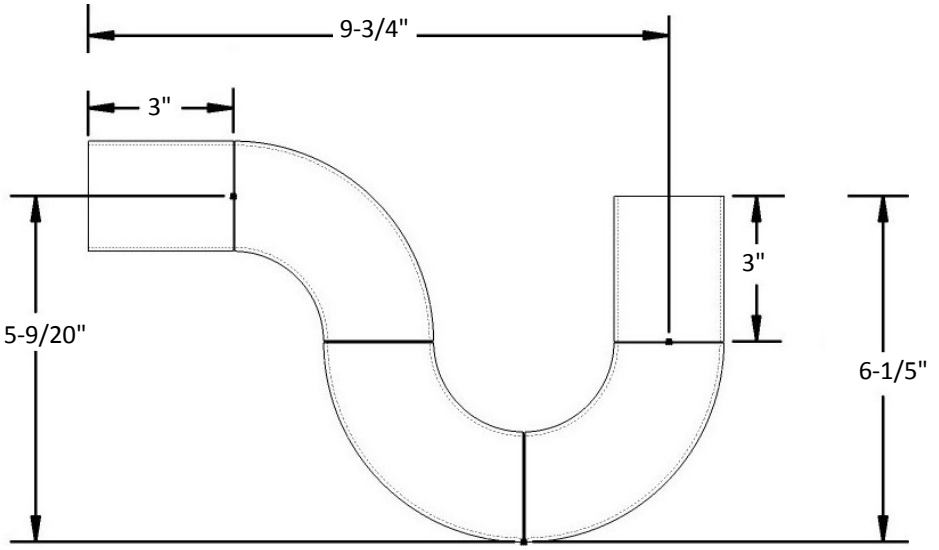

Note: Dimensions vary from illustration (Drawing not to scale) and are subject to manufacturer's tolerance.

11.13.2026

P-Trap Details

MATERIAL: 316L SS
ELBOW SIZE: 1-1/2" Sch 40
RISE LENGTH (INCHES): 3"
RUN LENGTH (INCHES): 3"
RISE OUTLET OPTION: None
RUN OUTLET OPTION: None

Project:

Fixture Tag:

Spec Text

KUSEL P-TRAP. TYPE 316L SS. 1-1/2" SCH 40 LONG RADIUS. 3" RISE. 3" RUN.

Approval

Company _____

Signed _____

Date _____

Subject to change without notice. We can assume no responsibility for use of superseded or void data. This product specification sheet is specific to the part number listed. For other configurations, contact a Kusel Equipment representative.