820 WEST STREET · WATERTOWN, WI 53094
KuselEquipment.com
EST. 1849 KUSEL STAINLESS PRODUCTS
PHONE: 920.261.4112
Sales@KuselEquipment.com

Kusel KEM Drain Specification Sheet

KM6–044–KX

KEM DRAIN, 316L, 4" SCH 40, KEM COVER
NO STRAINER





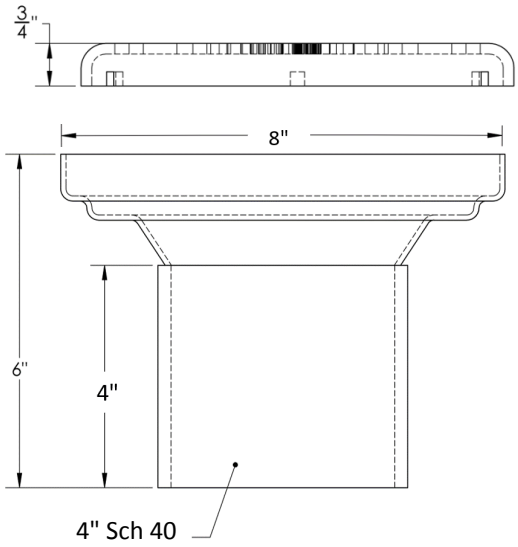

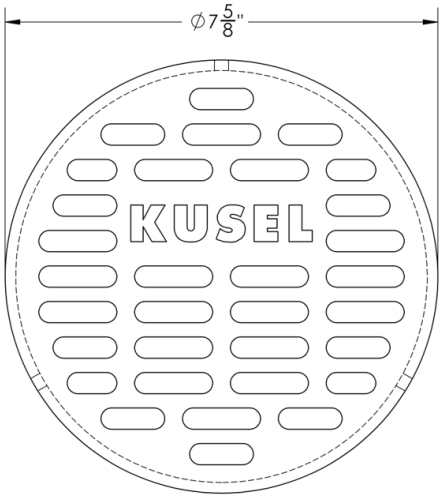

Note: Dimensions vary from illustration (Drawing not to scale) and are subject to manufacturer's tolerance. **11.13.2026**

KEM Drain Details

MATERIAL: 316L SS
OUTLET: 4" Sch 40
COVER: KEM Cover
STRAINER: None
RING: None
POLISH: None

Spec Text

KUSEL KEM DRAIN. 8" ROUND TOP DRAIN WITH TYPE 316L SS. 2" DEEP BODY. 4" SCH 40 OUTLET. 7–5/8" DIA KEM SLOTTED COVER WITH 3/8" SLOTS. NO STRAINER.

Project:

Fixture Tag:

Approval

Company _____

Signed _____

Date _____

Subject to change without notice. We can assume no responsibility for use of superseded or void data. This product specification sheet is specific to the part number listed. For other configurations, contact a Kusel Equipment representative.