820 WEST STREET · WATERTOWN, WI 53094
KuselEquipment.com
EST. 1849 KUSEL STAINLESS PRODUCTS
PHONE: 920.261.4112
Sales@KuselEquipment.com

Kusel KE Drain Specification Sheet

KE6R06–044–SP

KE DRAIN, 316L, RD TOP, 6" DB, 4" SCH 40
SOLID COVER, PERF BASKET, NSF

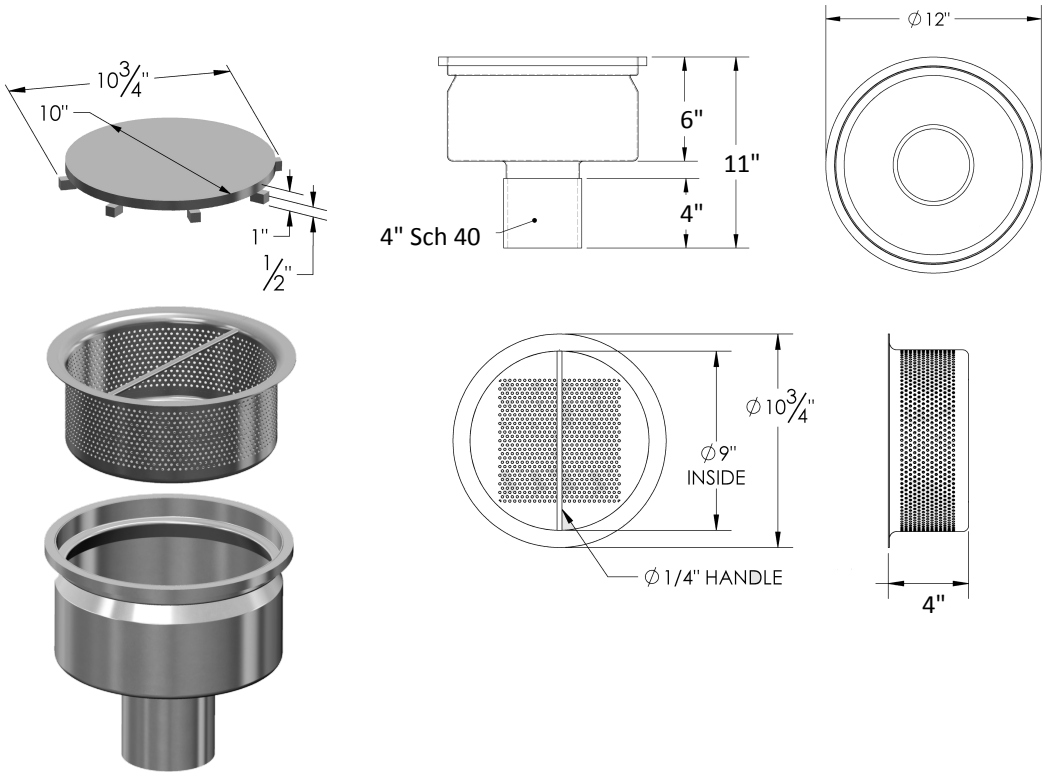

NSF

Note: Dimensions vary from illustration (Drawing not to scale) and are subject to manufacturer's tolerance.

11.13.2026

KE Drain Details

MATERIAL: 316L SS
TOP: Round Top
BODY DEPTH: 6" Deep Body
OUTLET: 4" Sch 40
COVER: Solid Cover
BASKET: Perforated Basket
PRIMER: None
NON–CONCRETE: None
RING: None
SECONDARY: None
POLISH: None

Project:

Fixture Tag:

Spec Text

KUSEL KE DRAIN, USDA ACCEPTED. TYPE 316L SS. 12" ROUND TOP PLATE WITH PASSIVATED 6" DEEP BODY AND INTEGRAL CONCRETE ANCHOR LIP. 4" SCH 40 OUTLET. STANDARD 1/2" THICK SOLID COVER WITH 1/2" PERIMETER DRAINAGE GAP. PASSIVATED PERFORATED BASKET WITH 1/8" HOLES. NSF CERTIFIED

Approval

Company _____

Signed _____

Date _____

Subject to change without notice. We can assume no responsibility for use of superseded or void data. This product specification sheet is specific to the part number listed. For other configurations, contact a Kusel Equipment representative.