820 WEST STREET · WATERTOWN, WI 53094
KuselEquipment.com
EST. 1849 KUSEL STAINLESS PRODUCTS
PHONE: 920.261.4112
Sales@KuselEquipment.com

Kusel Floor Trough Specification Sheet

FT4-061-183610-C

FLOOR TROUGH, 304, 18X36X10
6" SCH 10 OUT, CHANNEL GRATE

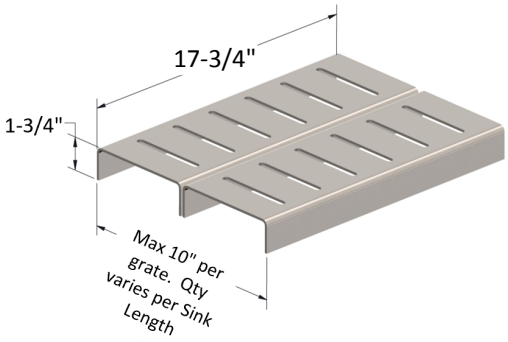

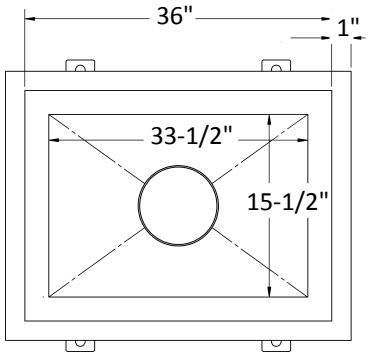

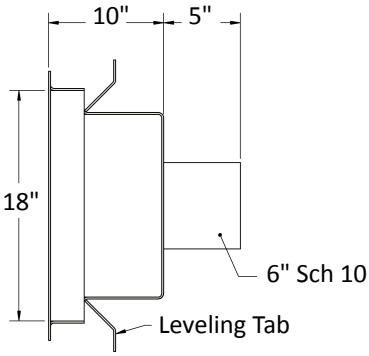

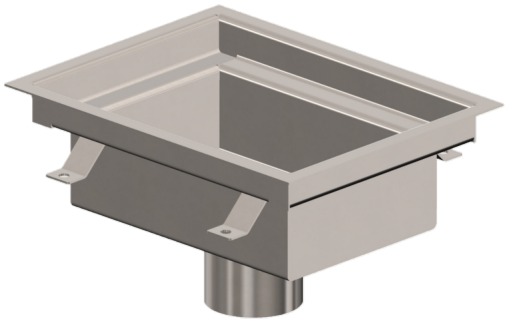

Note: Dimensions vary from illustration (Drawing not to scale) and are subject to manufacturer's tolerance.

11.13.2026

Floor Trough Details

MATERIAL: 304 SS
OUTLET: 6" Sch 10
WIDTH (INCHES): 18"
LENGTH (INCHES): 36"
DEPTH (INCHES): 10"
GRATE: Channel
STRAINER: None

Spec Text

KUSEL FLOOR TROUGH. 14 GA TYPE 304 SS – STANDARD INDUSTRIAL FINISH BODY WITH 4 LEVELING TABS (2 PER SIDE) AND 6" SCH 10 OUTLET. 18" WIDE X 36" LONG X 10" DEEP. 10GA FORMED CHANNEL GRATE – 3/8" SLOTS ON 2-3/8" CENTERS.

Project:

Fixture Tag:

Approval

Company _____

Signed _____

Date _____

Subject to change without notice. We can assume no responsibility for use of superseded or void data. This product specification sheet is specific to the part number listed. For other configurations, contact a Kusel Equipment representative.