820 WEST STREET · WATERTOWN, WI 53094
KuselEquipment.com
PHONE: 920.261.4112
Sales@KuselEquipment.com

EST. 1849 KUSEL STAINLESS PRODUCTS

# Kusel Floor Trough Specification Sheet

## FT4–044–244810–C

FLOOR TROUGH, 304, 24X48X10
4" SCH 40 OUT, CHANNEL GRATE

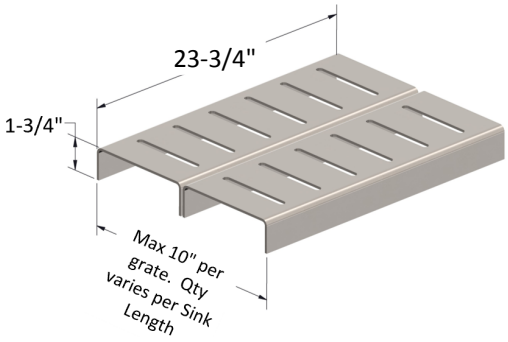


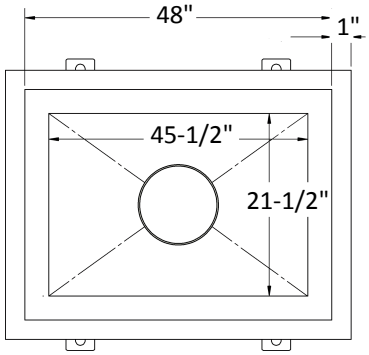


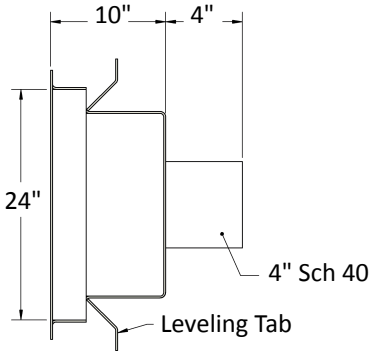


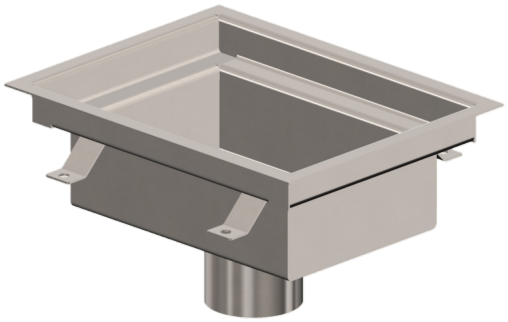

Note: Dimensions vary from illustration (Drawing not to scale) and are subject to manufacturer's tolerance.

11.13.2026

## Floor Trough Details

MATERIAL: 304 SS
OUTLET: 4" Sch 40
WIDTH (INCHES): 24"
LENGTH (INCHES): 48"
DEPTH (INCHES): 10"
GRATE: Channel
STRAINER: None

## Spec Text

KUSEL FLOOR TROUGH. 14 GA TYPE 304 SS – STANDARD INDUSTRIAL FINISH BODY WITH 4 LEVELING TABS (2 PER SIDE) AND 4" SCH 40 OUTLET. 24" WIDE X 48" LONG X 10" DEEP. 10GA FORMED CHANNEL GRATE – 3/8" SLOTS ON 2–3/8" CENTERS.

## Project:

## Fixture Tag:

### Approval

**Company** _____

**Signed** _____

**Date** _____

Subject to change without notice. We can assume no responsibility for use of superseded or void data. This product specification sheet is specific to the part number listed. For other configurations, contact a Kusel Equipment representative.