820 WEST STREET · WATERTOWN, WI 53094
KuselEquipment.com
EST. 1849 KUSEL STAINLESS PRODUCTS
PHONE: 920.261.4112
Sales@KuselEquipment.com

# Kusel Floor Trough Specification Sheet

## FT4-044-124210-0-S

FLOOR TROUGH, 304, 12X42X10
4" SCH 40 OUT, OPEN GRATE, STRAINER

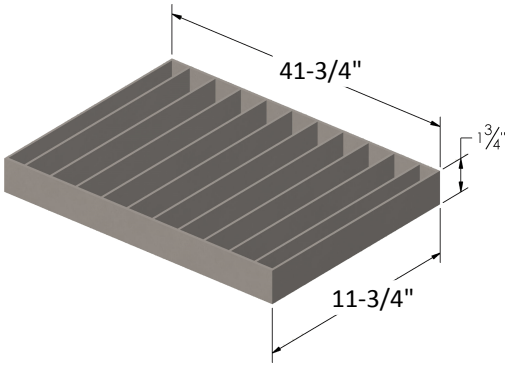


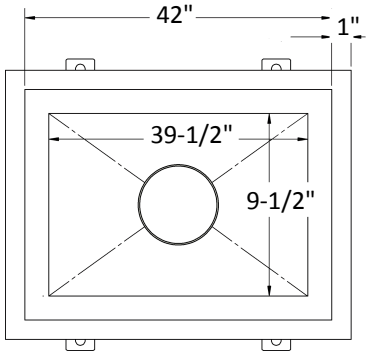


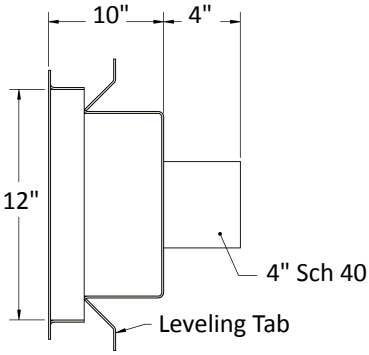


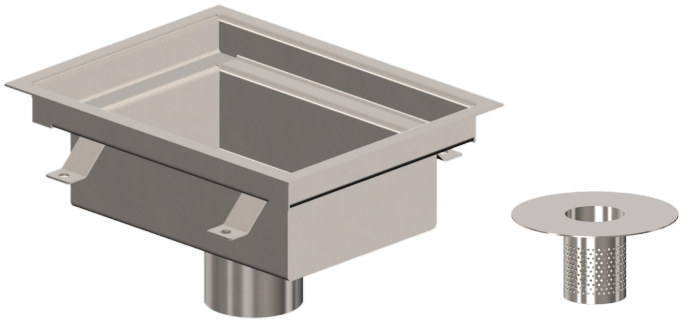

**Note: Dimensions vary from illustration (Drawing not to scale) and are subject to manufacturer's tolerance.** **11.13.2026**

## Floor Trough Details

MATERIAL: 304 SS
OUTLET: 4" Sch 40
WIDTH (INCHES): 12"
LENGTH (INCHES): 42"
DEPTH (INCHES): 10"
GRATE: Open
STRAINER: Strainer

## Spec Text

KUSEL FLOOR TROUGH. 14 GA TYPE 304 SS – STANDARD INDUSTRIAL FINISH BODY WITH 4 LEVELING TABS (2 PER SIDE) AND 4" SCH 40 OUTLET. 12" WIDE X 42" LONG X 10" DEEP. OPEN GRATE WITH CONTINUOUSLY WELDED 10GA BEARING BARS ON 1-1/2" CENTERS WITH 8GA SIDE BANDING BARS. PERFORATED OUTLET STRAINER WITH 1/8" HOLES.

## Project:

## Fixture Tag:

### Approval

**Company** _____

**Signed** _____

**Date** _____

**Subject to change without notice. We can assume no responsibility for use of superseded or void data. This product specification sheet is specific to the part number listed. For other configurations, contact a Kusel Equipment representative.**