820 WEST STREET · WATERTOWN, WI 53094
KuselEquipment.com
EST. 1849 KUSEL STAINLESS PRODUCTS
PHONE: 920.261.4112
Sales@KuselEquipment.com

# Kusel Floor Sink Specification Sheet

## FS4–044–183612–0–Y

FLOOR SINK, 304, 18X36X12

4" SCH 40 OUT, OPEN GRATE, BASKET, STRAINER

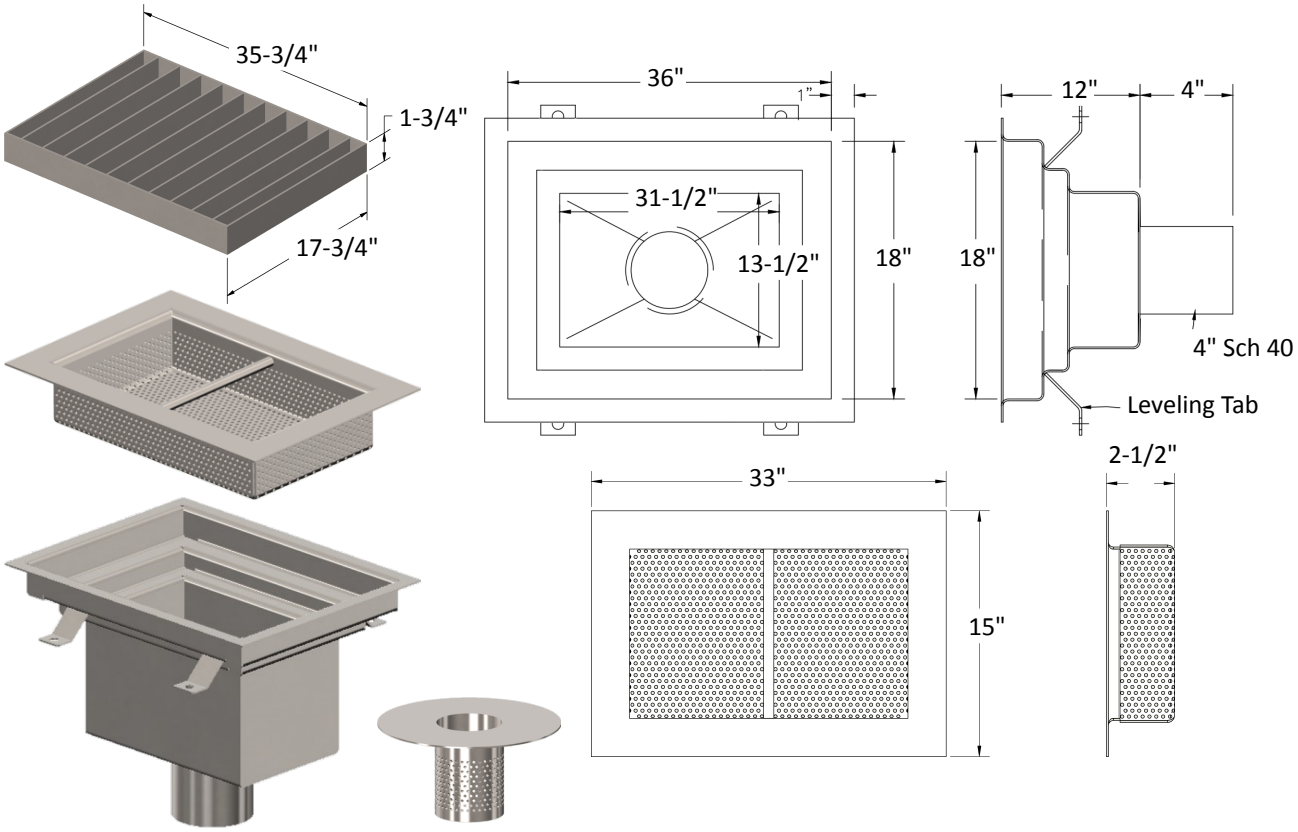


Note: Dimensions vary from illustration (Drawing not to scale) and are subject to manufacturer's tolerance.

11.13.2026

## Floor Sink Details

MATERIAL: 304 SS
OUTLET: 4" Sch 40
WIDTH (INCHES): 18"
LENGTH (INCHES): 36"
DEPTH (INCHES): 12"
GRATE: Open
BASKET – STRAINER: Basket & Strainer

## Spec Text

KUSEL FLOOR SINK. 14 GA TYPE 304 SS – STANDARD INDUSTRIAL FINISH BODY WITH 4 LEVELING TABS (2 PER SIDE) AND 4" SCH 40 OUTLET. 18" WIDE X 36" LONG X 12" DEEP. OPEN GRATE WITH CONTINUOUSLY WELDED 10GA BEARING BARS ON 1–1/2" CENTERS WITH 8GA SIDE BANDING BARS. PERFORATED BODY BASKET 2–1/2" DEEP WITH 1/8" HOLES AND PERFORATED OUTLET STRAINER WITH 1/8" HOLES.

**Project:**

**Fixture Tag:**

### Approval

**Company** _____

**Signed** _____

**Date** _____

Subject to change without notice. We can assume no responsibility for use of superseded or void data. This product specification sheet is specific to the part number listed. For other configurations, contact a Kusel Equipment representative.