820 WEST STREET · WATERTOWN, WI 53094
KuselEquipment.com
EST. 1849 KUSEL STAINLESS PRODUCTS
PHONE: 920.261.4112
Sales@KuselEquipment.com

Kusel Standard Cleanout Specification Sheet

C04–06M–AP

CLEANOUT, 304, 6" MPT , ADJ
PVC PLUG, NSF



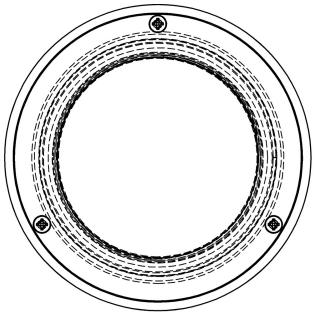

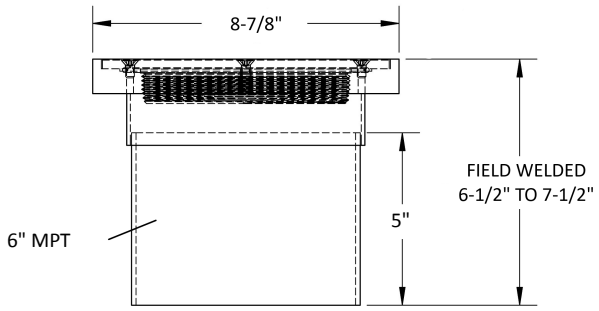

NSF

Note: Dimensions vary from illustration (Drawing not to scale) and are subject to manufacturer's tolerance.

11.13.2026

Standard Cleanout Details

MATERIAL: 304 SS
OUTLET: 6" MPT
STYLE: Field Welded
PLUG TYPE: PVC
POLISH: None

Project:

Fixture Tag:

Spec Text

KUSEL CLEANOUT. TYPE 304 SS. 8–7/8" DIAMETER TOP WITH 6" MPT OUTLET. FIELD WELDED TOP WITH PVC PLUG. STANDARD SOLID SCREW DOWN COVER. NSF CERTIFIED

Approval

Company

Signed

Date

Subject to change without notice. We can assume no responsibility for use of superseded or void data. This product specification sheet is specific to the part number listed. For other configurations, contact a Kusel Equipment representative.