820 WEST STREET · WATERTOWN, WI 53094
KuselEquipment.com
EST. 1849 KUSEL STAINLESS PRODUCTS
PHONE: 920.261.4112
Sales@KuselEquipment.com

Kusel Standard Cleanout Specification Sheet

C04–064–AP–P

CLEANOUT, 304, 6" SCH 40 , ADJ
PVC PLUG, POLISH TOP, NSF



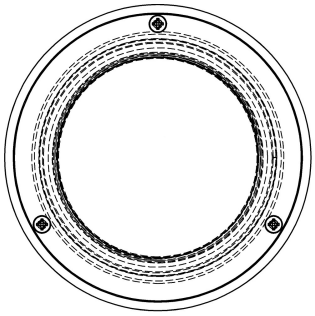

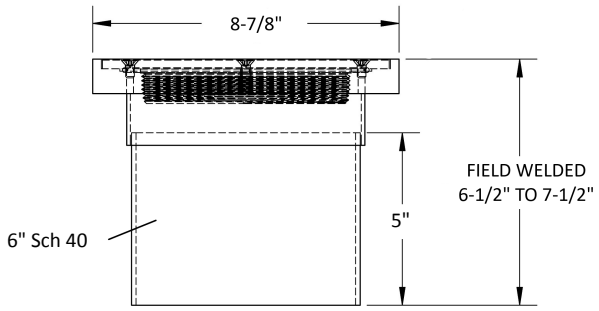

Note: Dimensions vary from illustration (Drawing not to scale) and are subject to manufacturer's tolerance.

11.13.2026

Standard Cleanout Details

MATERIAL: 304 SS
OUTLET: 6" Sch 40
STYLE: Field Welded
PLUG TYPE: PVC
POLISH: Polish

Project:

Fixture Tag:

Spec Text

KUSEL CLEANOUT. TYPE 304 SS. 8–7/8" DIAMETER TOP WITH 6" SCH 40 OUTLET. FIELD WELDED TOP WITH PVC PLUG. STANDARD SOLID SCREW DOWN COVER. POLISHED TOP. NSF CERTIFIED

Approval

Company _____

Signed _____

Date _____

Subject to change without notice. We can assume no responsibility for use of superseded or void data. This product specification sheet is specific to the part number listed. For other configurations, contact a Kusel Equipment representative.