820 WEST STREET · WATERTOWN, WI 53094
KuselEquipment.com
EST. 1849 KUSEL STAINLESS PRODUCTS
PHONE: 920.261.4112
Sales@KuselEquipment.com

# Kusel Standard Cleanout Specification Sheet

## CO4–04M–WP

CLEANOUT, 304, 4" MPT
PVC PLUG, NSF



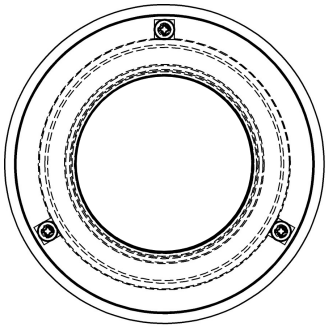

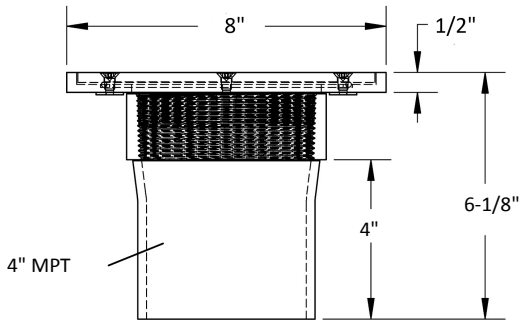


NSF

Note: Dimensions vary from illustration (Drawing not to scale) and are subject to manufacturer's tolerance.

11.13.2026

### Standard Cleanout Details

MATERIAL: 304 SS
OUTLET: 4" MPT
STYLE: Fixed Weld
PLUG TYPE: PVC
POLISH: None

### Project:

### Fixture Tag:

### Spec Text

KUSEL CLEANOUT. TYPE 304 SS. 8" DIAMETER TOP WITH 4" MPT OUTLET. WELDED TOP AT STANDARD HEIGHT WITH PVC PLUG. STANDARD SOLID SCREW DOWN COVER. NSF CERTIFIED

**Approval**

**Company** _____

**Signed** _____

**Date** _____

Subject to change without notice. We can assume no responsibility for use of superseded or void data. This product specification sheet is specific to the part number listed. For other configurations, contact a Kusel Equipment representative.