820 WEST STREET · WATERTOWN, WI 53094
KuselEquipment.com
EST. 1849 KUSEL STAINLESS PRODUCTS
PHONE: 920.261.4112
Sales@KuselEquipment.com

# Kusel Closing Cover Cleanout Specification Sheet

## CC4–06F–WP

CLEANOUT, 304, 6" FPT
PVC PLUG, CLOSING COVER



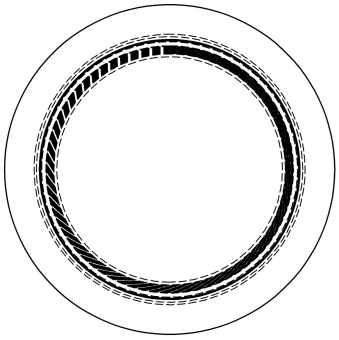

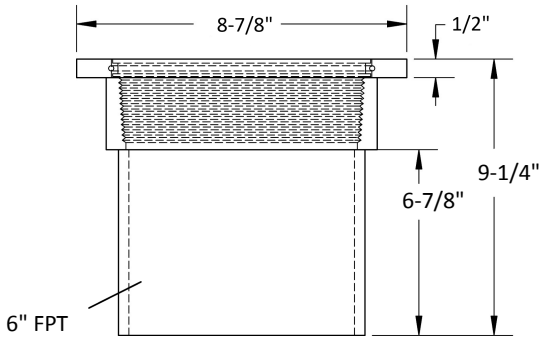


Note: Dimensions vary from illustration (Drawing not to scale) and are subject to manufacturer's tolerance.

11.13.2026

### Closing Cover Cleanout Details

MATERIAL: 304 SS
OUTLET: 6" FPT
PLUG TYPE: PVC
POLISH: None

### Project:

### Fixture Tag:

### Spec Text

KUSEL CLEANOUT. TYPE 304 SS. 8–7/8" DIAMETER TOP WITH 6" FPT OUTLET. WELDED TOP WITH PVC PLUG. CLOSING COVER W/ O–RING SEAL.

**Approval**

**Company** _____

**Signed** _____

**Date** _____

Subject to change without notice. We can assume no responsibility for use of superseded or void data. This product specification sheet is specific to the part number listed. For other configurations, contact a Kusel Equipment representative.