820 WEST STREET · WATERTOWN, WI 53094
KuselEquipment.com
EST. 1849 KUSEL STAINLESS PRODUCTS
PHONE: 920.261.4112
Sales@KuselEquipment.com

Kusel Closing Cover Cleanout Specification Sheet

CC4–031–WP

CLEANOUT, 304, 3" SCH 10
PVC PLUG, CLOSING COVER



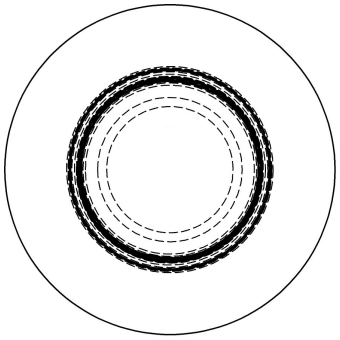

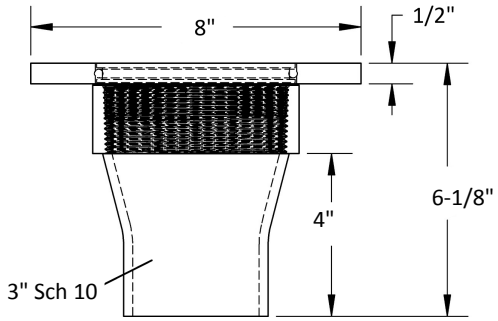

Note: Dimensions vary from illustration (Drawing not to scale) and are subject to manufacturer's tolerance.

11.13.2026

Closing Cover Cleanout Details

MATERIAL: 304 SS
OUTLET: 3" Sch 10
PLUG TYPE: PVC
POLISH: None

Project:

Fixture Tag:

Spec Text

KUSEL CLEANOUT. TYPE 304 SS. 8" DIAMETER TOP WITH 3" SCH 10 OUTLET. WELDED TOP WITH PVC PLUG. CLOSING COVER W/ O–RING SEAL.

Approval

Company _____

Signed _____

Date _____

Subject to change without notice. We can assume no responsibility for use of superseded or void data. This product specification sheet is specific to the part number listed. For other configurations, contact a Kusel Equipment representative.